6. Thermal Energy Services with LIQUEFIED PETROLEUM GAS

Sustainable Thermal Energy Service Partnerships

Xavier Lemaire | Daniel Kerr

UCL ENERGY INSTITUTE

STEPs
Sustainable Thermal Energy Service Partnerships

FOREWORD

Liquefied petroleum gas (LPG) has the potential to be a prominent energy source in the developing world, particularly in household sectors. The relative sustainability of LPG compared to traditional woodfuels, particularly in terms of carbon dioxide and monoxide emissions, and particulate matter (PM 2.5 and 10) emissions, makes the fuel an attractive option to policy-makers and governments looking to improve the sustainability of their economy. This has a number of co-benefits in tackling indoor air pollution in the developing world: with cleaner-burning LPG fuel supplanting traditional fuels, charcoal or kerosene for household use, health issues related to excessive indoor air pollution would be mitigated.

However, LPG use in the developing world, particularly Sub-Saharan Africa, has remained limited with a few exceptions. In oil-exporting states such as Nigeria and Ghana, LPG use in households remains low, despite the availability of indigenous refining capacity. There are a number of reasons behind the slow growth in market share of LPG in developing countries, most notably the cost. LPG is in most cases significantly more expensive than woodfuels, or other petroleum fractions such as kerosene. Access and distribution is another barrier to LPG growth, given the requirements for safe storage space, and the necessary appliance overheads in using LPG to begin with: cylinders, regulators, pipework and LPG-burning appliances.

This document seeks to explore the issues surrounding LPG use in the developing world in detail, as well as market development and policy support mechanisms to assist in LPG dissemination, and provide case studies on experience with LPG programs, their successes, and lessons.

- Xavier Lemaire & Daniel Kerr, 2018.

Acronyms

LPG Liquefied Petroleum Gas

NGL Natural Gas Liquid

NGO Non-Governmental Organisation

PM Particulate Matter

Kg Kilogram

Rp Rupee

USD United States Dollar

WLPGA World Liquefied Petroleum Gas Association GACC – Global Alliance of Clean Cookstoves

WHO World Health Organisation

Suggested citation for this paper: Lemaire X. and D. Kerr. (2018) *Thermal Energy Services with Liquefied Petroleum Gas*, UCL Energy Institute / STEPs.

This document is an output of the DfID-DECC-EPSRC funded project "Sustainable Thermal Energy Service Partnerships Project" – STEPs. More information on the STEPs project can be found on:
STEPs website: http://stepsproject.net/

Table of Contents

0. Introduction

The use of Liquefied Petroleum Gas (LPG) as a more sustainable alternative to traditional energy sources in developing countries has been a growing idea in recent history. The growth in oil and gas exploration in the Global South throughout the 1970s and 1980s led to an increase in supply of the fuel, as did the construction of indigenous extraction and refining capacity for LPG in a number of developing world nations, particularly West African and South-East Asian countries.

LPG has a number of benefits over traditional fuels: it is a cleaner energy source, producing less air pollution when used as a cooking fuel compared to traditional woodfuels or kerosene, and is a proven market-capable technology, with vast market experience to be adapted to developing world contexts. However, increasing LPG access in developing countries has proved difficult, given the constraints present in using the fuel, including price volatility on the global markets for large-scale supply, high price compared to woodfuels or charcoal at a local market level, and the necessary infrastructure for using the fuel such as safe storage capacity, distribution networks and consumer appliance supply.

This chapter seeks to explore the issues surrounding LPG use in developing countries, policy and financing mechanisms for supporting greater LPG market penetration, and the opportunities present in engaging in public-private partnerships for improving LPG access.

1.0 – LPG Use in Developing Countries

1.1. Patterns and Recent Developments

Liquefied Petroleum Gas (LPG) has been growing over the past 30 years to be a significant contributor to household and commercial/industrial energy usage in developing countries. However, it is only in the last 15 years in particular that using LPG as a fuel source has become feasible for rural communities in developing countries, particularly the rural poor, following significant growth in the 1990s of LPG processing and storage capacity in a number of Sub-Saharan African and South-East Asian countries, notably South Africa, Ghana, Singapore, Thailand and Kenya. (WLPGA 2014)

Whilst LPG use rates remain low (less than 10%) in a number of Sub-Saharan African countries' rural areas, government programs and NGO/third-sector work, as well as involvement from the private sector, is steadily increasing the market share for the fuel source in many countries. The potential uses of LPG in developing countries are wide-ranging, however the largest sectoral growth for use of LPG as a fuel source has been in the transport and household sectors, particularly using LPG as a cooking fuel, and fuel-switching to LPG as a more sustainable alternative to other automotive petroleum fuels. (WLPGA 2014, Bruce, Rehfeuss & Smith 2011).

Figure 1. Refining Process for Petroleum Fuels

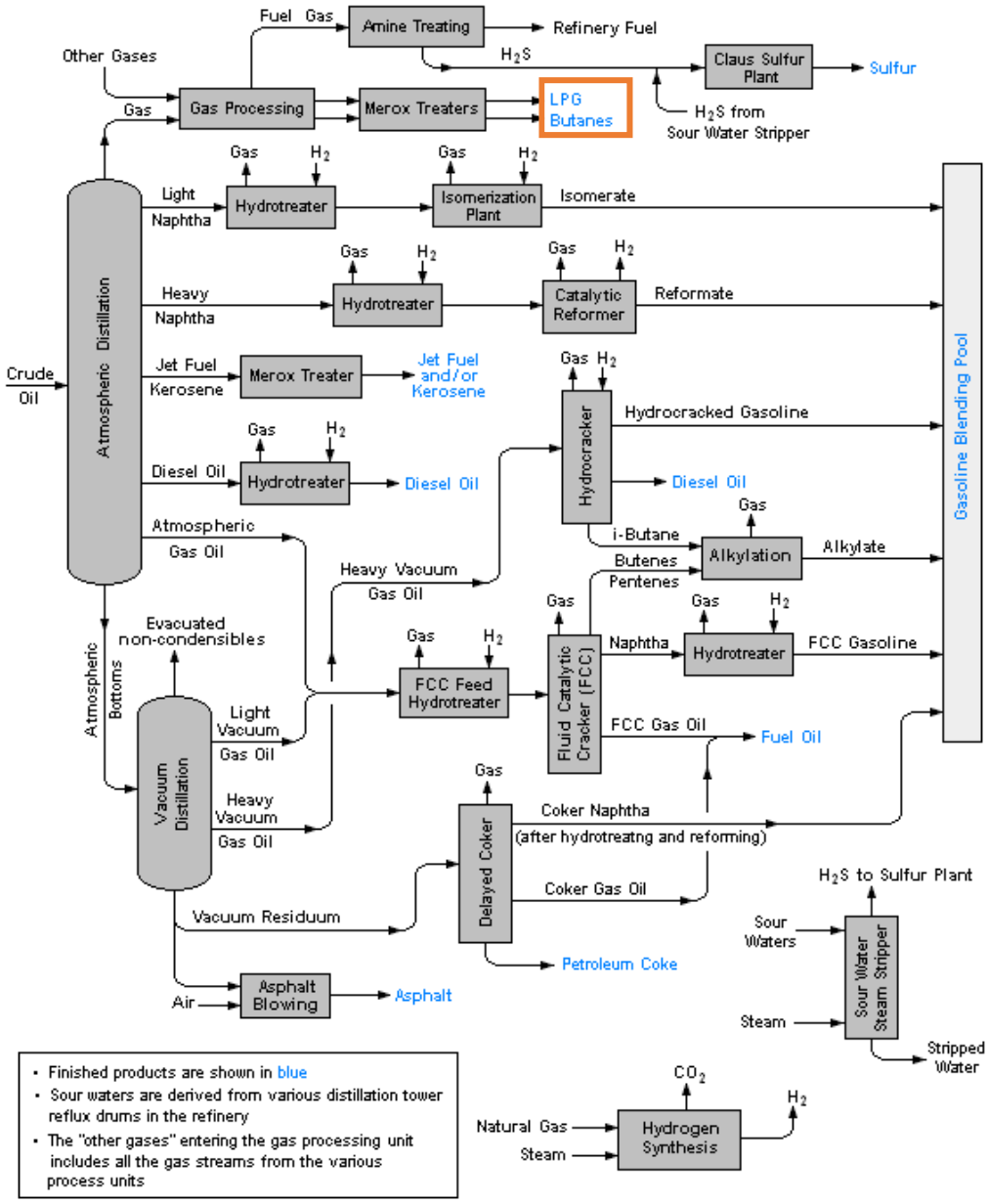

Image: mbeychok/CC BY 3.0/ https://upload.wikimedia.org/wikipedia/commons/6/60/RefineryFlow.png.
Orange box denotes LPG in the process

A number of developing countries, particularly West African nations such as Nigeria and Ghana, as well as Gulf countries such as Iran, have invested in indigenous LPG refining capacity, adding to existing oil refineries as well as constructing new dedicated LPG refining units.

Existing petroleum refineries (for example, those producing automotive or aeronautic fuels) can have LPG refining capacity added to them as a way of utilising lighter crude oil fractions, avoiding flaring of by-product petroleum gases in the process. In terms of extraction, natural gas liquids (NGL) are the ideal feedstock for LPG, having a high composition of C3 and C4 hydrocarbons, i.e. propane, butane and their analogues. (Linde Engineering, 2016)

However, the construction of LPG refineries, or add-on units to existing refining capacity, is an expensive process, and requires significant technical capacity, as well as long lead-times on the construction process. Estimated costs in 2006 for a new condensing oil refinery, of which roughly 20% of outputs would be in the form of LPG, in Iran, were approximately US$650 million, and investments in existing refining capacity at the Tema Oil Refinery in Ghana, both to repair and improve LPG refining capacity, were estimated at over US$100 million in 2013. (Dontow/Bloomberg 2013, Iran Gas Institute 2007)

Figure 2. Phase IV and V of the Assayouleh LPG refinery, Tehran.

Image: Reuters, http://uk.reuters.com/article/us-lpg-korea-iran-idUSBRE89U0NE20121031

2.0 – Fuel Switching

Using LPG as a household cooking fuel has several advantages over the use of traditional biomass fuels, which are still the most common cooking fuels used in Sub-Saharan Africa. LPG is significantly more energy-dense, having greater calorific values per kilo than for example firewood, and is also significantly less polluting. Carbon dioxide, carbon monoxide, nitrogen oxides and particulate matter (PM2.5 and PM10) emissions are all reduced when utilising LPG over woodfuels. Given the huge scale of health challenge facing the developing world, with nearly 4 million people dying each year from illnesses linked to indoor air pollution (WHO 2014), the significant reduction in indoor air pollution gained from utilising LPG in place of traditional biomass fuels is a beneficial factor.

Figure 1. Caloric Value Comparison of Cooking Fuels in MJ/kg or MJ/m^3

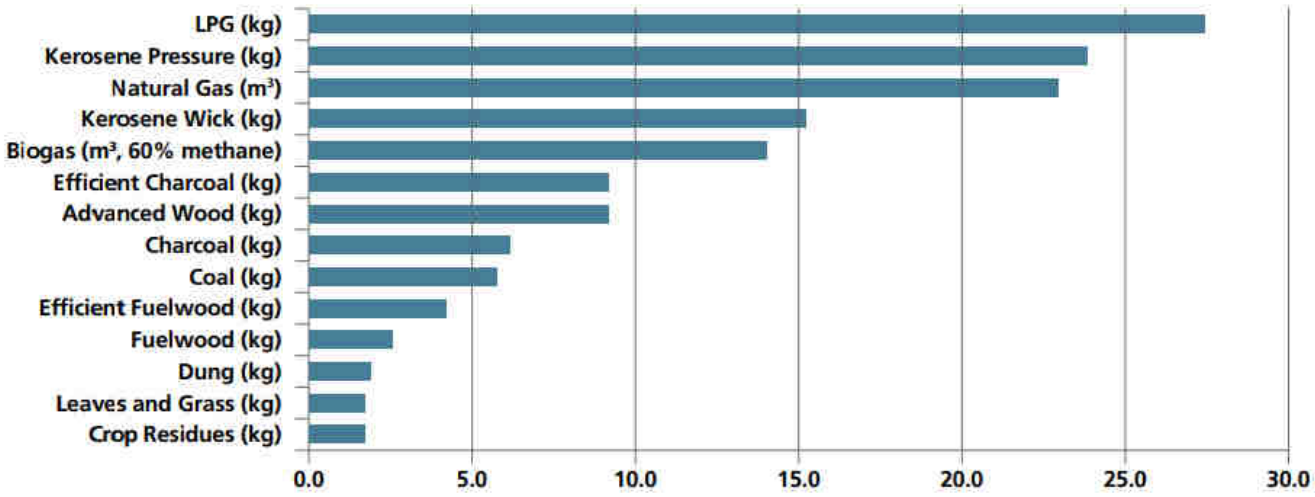

Source: World Bank, 2011.

A recent concept developing in the global literature surrounding sustainable energy use in developing countries at a household scale is energy stacking, which replaces the energy ladder concept where modern form of energy replace the old ones. This concept has come about through research (Baiyegunhi & Hassan 2014, Mensah & Adu 2015) finding that households in developing countries are actually often using multiple fuel sources based on availability, household income on a short-term basis and many other factors. Households will use traditional woodfuels or charcoal as a baseline thermal energy source, e.g. for cooking, but will also use electricity or kerosene for lighting, or LPG for cooking sporadically when economically feasible for the household.

Households in urban areas of Nigeria have demonstrated a preferential use of LPG as a thermal energy source when available and at a price point which is affordable for the household, indicating improved performance in operation in terms of indoor air pollution and ease of operation as contributing factors to the use of LPG fuel over other energy sources. (Baiyegunhi & Hassan, 2014)

Figure 2. Comparison of Emissions of Various Pollutants on a Logarithmic Scale to an LPG baseline

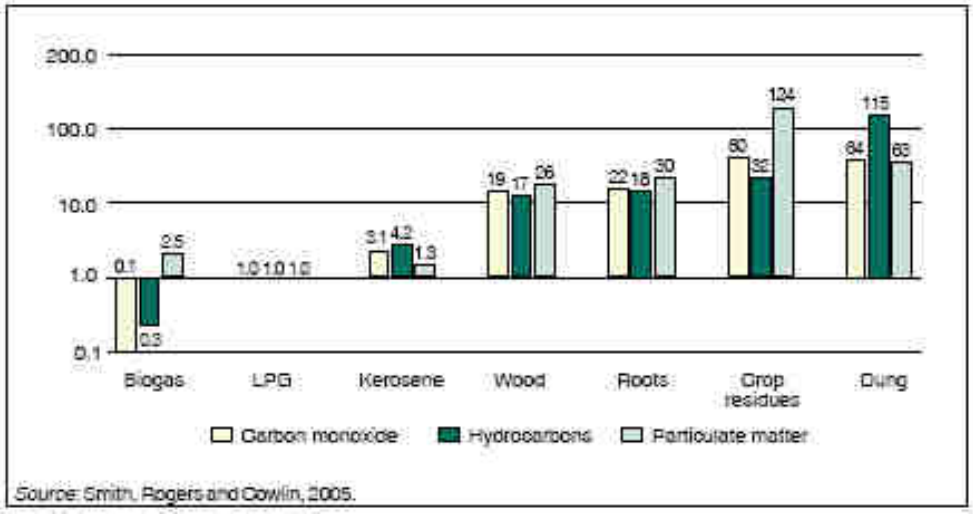

Source: Smith, Rogers & Cowin, 2005.

Sustainability can also be understood as the result of diversification of activities for energy service businesses which leads to long-term switching for end-users. Long-term fuel switching has been studied in the literature in response to government programs to promote alternative fuel sources for poor communities, for example in the case of the Ghanaian sector and its subsidy regimes (see case below) , as well as the energy concession model used for private sector growth in South Africa.

A number of factors affect a household's decision to either switch to LPG fuel for thermal energy services, or supplement the current household energy balance with LPG. The benefits of reduced indoor air pollution are immediately felt by a household switching to LPG for cooking, and this has been shown to be a factor considered by households when making the switch. LPG is also perceived in developing countries, particularly in Sub-Saharan African countries, as a more 'modern' fuel source, either due to its position in a social sense as a fuel source accessible to, and used by, the middle-income/higher-income demographic, or due to the cleaner operation of cooking equipment using the fuel. (der Kroon, Brouwer & van Beukering, 2014)

Figure 3. Woman in Lesotho Cooking with New LPG Stove.

Image: Binu Parthan, SEA.

http://stepsproject.net/wp-content/uploads/2016/02/CIMG0652-225x300.jpg

3.0 – Case Studies on LPG Use in Developing Countries

Some developing countries have been pursuing greater LPG market penetration in particular, including Ghana and South Africa, as well as in India and other South-East Asian nations such as Indonesia.

3.1 Ghanaian LPG Promotion Strategy

Ghana has a long history of government promotion of LPG as an alternative fuel source. The earliest government programs in the sector began in 1989, and recent government policy on energy has put access to LPG for households and institutions and security of LPG supply as key priorities in the national energy strategy. Previous measures to achieve these goals include promoting the development of LPG distribution to wider areas of the country through subsidising distribution businesses, as well as improving indigenous processing capacity in the Tema Refinery.

The 2010 National Energy Policy issued by the Ghanaian government continued this commitment. The further development of local and country-wide LPG infrastructure was a key pillar of this strategy, as were pricing incentives to encourage distribution companies to expand their operations to other areas of the country, for example rural communities and more economically-deprived areas. Specific measures covered under the Energy Sector Strategy and Development Plan included re-capitalising the Ghana Cylinder Manufacturing Company to create indigenous manufacturing capacity for LPG cylinders, developing district capital LPG bulk storage infrastructure in the medium term, and addressing the market and institutional barriers to increased access.

In addition, measures to promote the diffusion of smaller LPG cylinders (2 or 3 kg) were implemented, in order to bring LPG access within range of a wider segment of the population, in particular rural consumers who may not have the capital for a 7 or 11 kg LPG cylinder. The "LPG bottle recirculation" model, used in many developed countries for LPG supply, was also targeted for introduction, where customers pay a deposit on LPG cylinders, then exchange empty cylinders for filled ones on paying for LPG.

The Ghanaian LPG market has developed significantly over the last 10 years thanks to wide-ranging government support for the fuel and technology, including investing in new LPG processing and storage infrastructure, and through subsidies. LPG as a more sustainable fuel source for rural communities was also pursued through the government program, through a scheme of price levelling across the country, meaning that transport costs for LPG to the more remote Northern parts of Ghana were nullified in the consumer price.

Figure 4. Customers Queuing to Fill LPG bottles at a Filling Station in Accra

Image: http://www.todaygh.com/gas-shortage-hits-accra-tema-2/

As of 2013, 22.3% of the total population had access to LPG services. The Rural LPG Programme (RLP), an expansion of the earlier LPG Promotion Programme from 1989 – 2010, sought to disseminate LPG cylinders to rural communities near an LPG filling station and with high levels of biomass use for household energy. As of 2017 this programme had serviced 149,500 households in rural areas of the country with LPG cookstoves. (Mensah & Adu 2015, Asante et al. 2018)

These measures did have the desired effect of increasing LPG market share in household cooking fuel choice, as was the original goal of the government program, however other co-effects also transpired which were not originally targeted. These include a significant increase in the market share of LPG in the transport sector, with large numbers of vehicle owners, particularly commercial vehicles, like taxis converting to LPG fuel as a cost-saving measure, given its new availability and subsidised price. This secondary effect highlights the potential for unintended consequences of using direct subsidies for fuels, but also the growth potential for LPG in the transport sector in developing countries. The subsidy programme was cancelled in February 2013 in addition to all other petroleum product subsidies. This was due to government overspending: the programmes were cut to restore fiscal stability following a budget overspend of nearly 100% in 2012 by the Ghanaian government. (Asante et al. 2018)

Further reading:

Econoler (2014) Business Models for the Delivery of Modern Thermal Energy Services – The Cases of Ghana and Tunisia. Available at: http://stepsproject.net/wp-content/uploads/2016/02/Business-Models-For-The-Delivery-Of-Modern-Thermal-Energy-Services-The-Cases-Of-Ghana-And-Tunisia-Econoler.pdf

3.2 Indonesian Kerosene-LPG Conversion Megaproject

The Indonesian government began a wide-ranging project of promoting LPG use in urban and rural areas of the country over the widely-available kerosene in 2007. Reasons were behind this decision were notably improving indoor air quality and public health, as well as alleviating the burden of kerosene consumption subsidies in the government (these subsidies amounted to 3.7% of GDP in 2008, or 18% of total government expenditure).

Focusing on LPG as an alternative fuel due to its existing state of development in the country following oil and gas exploration activities, the government program by 2009 had distributed more than 44 million LPG conversion kits to 15 provinces in the country, consisting of an LPG single burner, a 3 kg full LPG cylinder, and the necessary accessories (regulator, hoses) to enable their use.

Subsidies per litre for LPG fuel as of 2008 were Rp 1,700 (USD 0.13). One of the major drivers of the LPG conversion megaproject was the lower relative subsidy levels required: for the equivalent energy amount, kerosene required Rp 4,200 (USD 0.31) per litre to be sold at the subsidised price of Rp 2,500 (USD0.18) per litre, as was the case with LPG. (Andadari et al., 2014)

Figure 5. Fuel Use in Assessed Households after LPG Conversion Project in Indonesia.

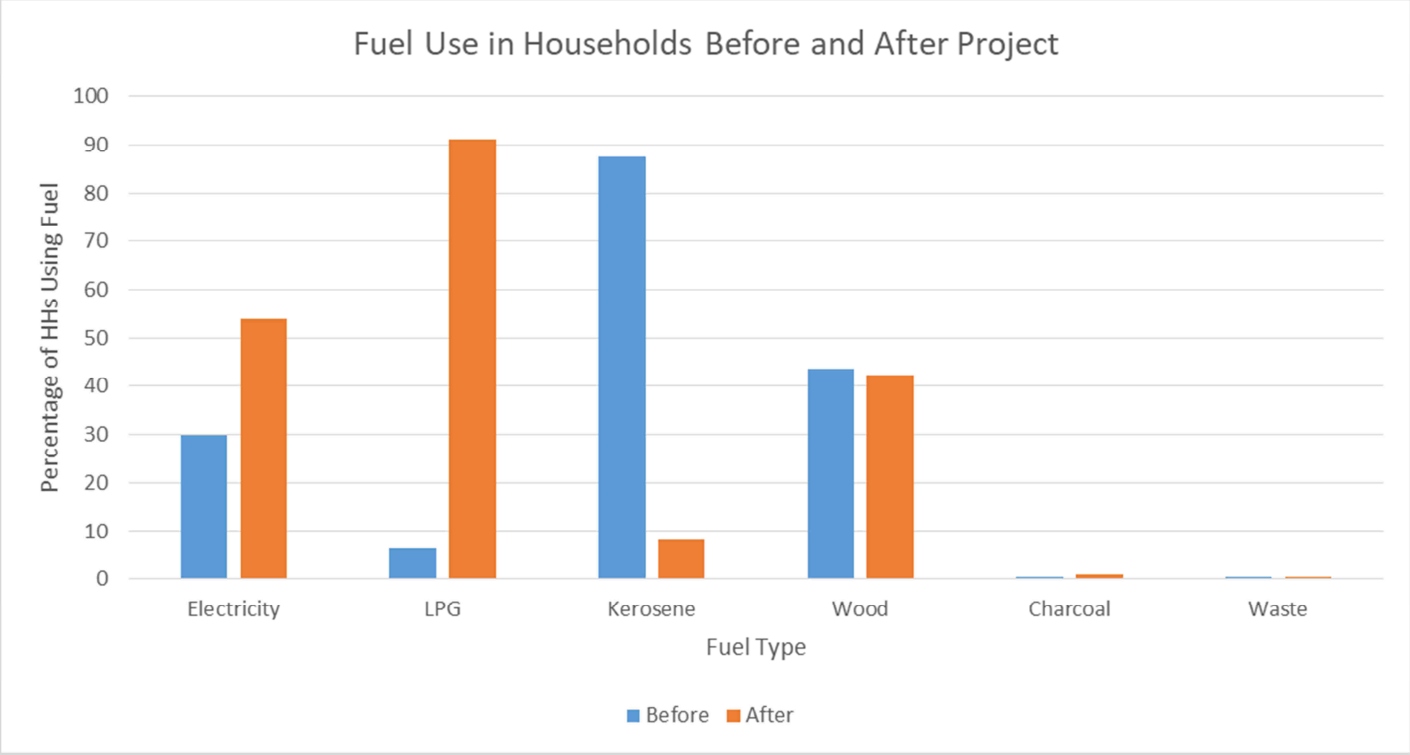

Source: Andadari et al., 2014.

The program was highly successful in encouraging fuel-switching to LPG, with more than 80% of rural and 90% of (peri-)urban households using the fuel source after the conclusion of the program in 2010. This number includes both single-use households (using LPG as their sole source of thermal energy) and multi-mode fuel use households, where LPG complements other energy sources. The LPG program also had significant impacts on fuel-stacking rates in the country, which Andadari et al. (2014) showed to be consistent with the increase in prices of traditional single-source fuels such as woodfuels and kerosene, as was the case following the withdrawal of kerosene subsidies.

Net savings for the government as a result of the avoided kerosene subsidies, taking into account the USD1.2 billion cost of the LPG equipment distribution program, were approximately USD1.8 billion as of May 2010 (Budya & Arofat 2010).

As of 2018, the program is still in effect, although some challenges have been encountered due to fluctuating global oil prices, and the knock-on effects that these price fluctuations have had on the level of LPG subsidy expenditure by the government. For example, comparing total expenditure in 2014 and 2015, USD4 billion of subsidies were distributed for LPG in 2014, compared to USD2.1 billion in 2015. The significant and growing fiscal burden of LPG subsidies led to government proposals in 2016 to reform the subsidy program, maintaining an equivalent level of subsidy but more effectively targeting poorer households to enhance the social welfare aspect of the program. Approximately USD3.5 billion was allocated for the 2018 subsidy program, targeting the bottom 40% of households by income through integration with national social welfare databases. (Kruger, Tait & de Groot 2016, Thoday et al., 2018)

Further reading:

Permadi, Sofyan & Oanh (2017) Assessment of emissions of greenhouse gases and air pollutants in Indonesia and impacts of national policy for elimination of kerosene use in cooking. *Atmospheric Environment*, Vol. 154, pp. 82 – 94.

ASTAE/AusAid (2013) *Indonesia: Toward Universal Access to Clean Cooking*. Available at: http://documents.worldbank.org/curated/en/105441468044144806/pdf/792790ESW0P1290ox0377371B00PUBLIC00.pdf

3.3 The Indian LPG Sector

The Indian LPG sector steadily grew throughout the late 1990s and early 2000s, with 17.5% of Indian households reporting some use of LPG as of 2001. The vast majority of this use was in urban areas, and indigenous refining and production capacity thanks to natural gas explorations enabled a reliable supply of LPG to the country. However, rural supply and use of LPG for cooking continued to lag behind urban development, and as of the 2007-8 national census, only 9.1% of rural households were using LPG for cooking.

This is despite a state-level program for kerosene-LPG conversion in the mid-2000s, with the withdrawal of subsidised kerosene and new provisions for LPG supply. (D'Sa & Narashima Murthy, 2004, Pandey & Chaubal, 2011)

As of 2015, the Indian government was still subsidising LPG use in the country through the Direct Benefits Transfer for LPG subsidy, instituted nationwide on the 1st January 2015. Consumers upon joining the scheme receive a one-time permanent advance to purchase their first market-price cylinder, and the government promoted joining the scheme through a nation-wide subsidy campaign for three months, to be extended to six upon joining the scheme. So far over 143 million people have benefited from the subsidies for LPG in India. (MPNG India, 2015)

The Indian LPG sector has struggled with the diversion of household LPG subsidies to non-household LPG use. Price fluctuations have also adversely affected the market for LPG in India, with prices varying between RS50 and RS90/kg as recently as 2014. The Direct Benefits Transfer scheme is intended to reduce the leakage and misapplication of subsidies through direct payments to the recipient's bank account, and a voluntary opt-out of subsidies scheme has seen over 1 million households sign up. The structuring of the LPG subsidy program in India is such that there is no upper household income limit for eligibility for subsidies, and it is estimated that through the DBTL program, some RS50-80 million could be saved. (Tripathi, Sagar & Smith, 2015)

As of late 2017, the Direct Benefit Transfer scheme had reached over 177 million Indian households, transferring approximately USD10 billion over its four-year duration to that point to consumers in the form of subsidies to LPG consumers. The core successes of the subsidy program have been to more effectively target the subsidy beneficiaries through new processes to prevent duplicate enrolments in the program, and removing the incentives to divert LPG subsidies intended for household use to other uses through market sales of cylinders. These cylinders are sold at market price, and subsidies are only available once delivery of the cylinder is confirmed to the consumer. (Mittal, Mukherjee & Gelb, 2017)

Further reading:

Jain (2018) A fine balance: Lessons from India's experience with petroleum subsidy reforms. *Energy Policy*, Vol. 119, pp. 242 – 249.

Barnwal (2016) *Curbing Leakage in Public Programs with Direct Benefit Transfers: Evidence from India's Fuel Subsidies and Black Markets*. Available at: http://pubdocs.worldbank.org/en/826341466181741330/Barnwal-DBT-India.pdf

3.4 The South African LPG Market

Integrating LPG as an alternative energy source in existing energy service businesses can add new revenue streams and help to make businesses more sustainable. This approach has been used in the South African LPG market, in particular for rural off-grid energy businesses. Rural electricity concession businesses established under the Rural Electrification Program have diversified their product portfolios to include LPG products, as a method of creating additional revenue streams, as well as being integrated with the frequent-contact, service-based nature of their businesses.

The Nuon-RAPS utility (NuRa), operates energy stores in many rural areas of KwaZulu-Natal, and allowing customers to purchase LPG (under a cylinder exchange model), as well as a range of LPG-using appliances through the company, expands their market share in energy services, and allows customers to access a "one-stop shop" for their energy needs, simplifying the process of acquiring energy resources. This also ensures regular consumer contact with the company, building relationships and confidence in the communities the company is active in.

Figure 6. LPG enclosure and filling station at Nuon-RAPS service centre, Mkuze, South Africa

Image: Daniel Kerr, 2014.

Companies mandated with providing energy services to rural communities in South Africa through the government's concession scheme have been turning to LPG as another service to be provided through their business, expanding their business sectors from purely electrical energy services (most commonly solar home systems), to thermal energy services with LPG as well. (Treiber, Grimsby & Aune, 2015, Yonemitsu et al., 2014)

As of 2017, the LPG market in South Africa had continued to develop, both on a formal and informal basis. 452 formal retailers in the form of filling stations and camping/hardware stores were identified in a 2017 market survey, with around 4,000 other small-scale retailers also selling LPG cylinders. The household market, however, only accounted for approximately 15% of total consumption as of 2017, with industrial and commercial bulk consumers making up the remainder. This is attributable to several factors: cylinder consumers typically pay more than bulk consumers for their LPG services, due to supply chain costs and the costs of cylinders themselves. There are also concerns within the South African domestic market as to the safety of LPG, despite the benefits. Given these factors, and the current lack of government support for the fuel, particularly for low-income households, LPG has still not reached a significant level of market development in the domestic sector. (Competition Commission of South Africa, 2017)

Further reading:

Kimemia & Annegarn (2016) Domestic LPG interventions in South Africa: Challenges and lessons. *Energy Policy*, Vol. 93, pp. 150 – 156.

Competition Commission of South Africa (2017) *Market Inquiry into the LPG Sector – Final Report*. Available at: http://www.compcom.co.za/wp-content/uploads/2017/04/LPG-FINAL-NON-CONFIDENTIAL-VERSION.pdf

Table 1. Summary of Case Studies

Country	To what level was government involved in market development?	Existence of a commercial LPG market?	Income level and effect on market development	Capacity to develop LPG market
Ghana	High – direct government subsidies for LPG fuel intended to develop domestic LPG market	Medium – network of commercial bulk distributors and consumers exists, domestic market operates on commercial basis with price subsidy	Low-Medium – developing country context, ability of majority of particularly rural consumers to afford LPG without subsidy low	Medium – indigenous refining capacity available, ability of government to afford to reinstate LPG subsidy given previous level of demand low
Indonesia	High – direct government subsidies for LPG equipment, nationwide mega-project to convert country from kerosene to LPG	High – commercial LPG market well-established for large consumers as well as domestic sector	Medium – middle-income country, unsubsidised fuel market but subsidised equipment market has enhanced affordability	High – indigenous extraction and refining capacity, government program continuing to subsidise equipment
India	Medium – Previous state-level programs aimed at kerosene-LPG conversion, continuing federal subsidy through Direct Benefit Transfer program	High – commercial LPG market established across country, fuel provided at subsidised price to consumers	Medium – highly variable incomes across country, middle-income consumers not eligible for fuel subsidy, lower-income consumers eligible	High – Significant indigenous extraction and refining capacity, large commercial sector and very large potential domestic market
South Africa	Low – little direct government involvement in LPG promotion as a fuel or market, except through rural concessions	Medium – commercial LPG market exists for bulk consumers and domestic sector – price barrier to rural consumers still high	Medium – middle-income developing country, lack of rural consumer affordability of fuel has hampered penetration	High – indigenous refining capacity and large potential domestic market

4.0 – Innovative Approaches to LPG Services[1]

4.1 KOKO Networks, Kenya

A number of companies across Sub-Saharan Africa are seeking to take advantage of new technological solutions to provide fuel services to previously unserviced (or under-serviced) communities. One such organisation is KOKO Networks, currently operating in both East Africa (notably Kenya) and India. The company is using integrated technology solutions to provide both goods and services to consumers in partnership with suppliers, allowing consumers access to goods and services in a convenient manner, and providing suppliers opportunities to access new markets with an integrated delivery and payment model. As part of the company's offering in Kenya, an integrated, neighbourhood-level clean cooking solution is offered.

The delivery of these services is via the company's proprietary "KOKO points", which are cloud-connected commerce hubs where consumers and vendors can come to refill the products on sale or make purchases. Currently the company is offering the SmartCook product at these sales points, which is a two-burner clean cookstove with an integrated fuel canister. The fuel used is marketed as Mafuta smart, which is an ethanol fuel derived from molasses manufacture.

What is particularly innovative about this system is that the sales hubs for the company have in the automated purchasing stations for the fuel for the cookstove system. These dispensers refill the provided fuel canister (known as a kibuya smart canister) with the cookstove system, and customers can refill their canister from as little as KHS30 (USD 0,29) at a time, offering significant flexibility for the consumer, without the "poor people's premium" (higher per-unit prices charged for small amounts of consumable products) seen in other commodities. The company operates on a concession business model, with interested parties either setting up their own fuel supply arrangements for the fuel to service their settlement, or purchasing equipment and fuels from KOKO themselves.

Whilst this case does not specifically pertain to LPG services, similar business models and delivery models could be used to deliver LPG services as are being used to deliver the bioethanol stove and fuel used by SmartCook in partnership with KOKO Networks in Kenya. Indeed, bioethanol is rapidly becoming a viable alternative cooking fuel in competition with LPG in the sector. (KOKO Networks 2018, Clean Cooking Alliance 2017, Dalberg 2018)

Other cookstoves using LPG specifically are available in the Kenyan market. The *Pima Gas stove* initiative in Kenya is an example of the new, low-cost low-refill-cost type of LPG stove that aims to overcome the traditional difficulties of high initial stove costs and high fuel marginal costs and upfront costs. These stoves retail for USD 23 for a complete unit, including a 1 kg LPG canister and a stove top.

[1] Other innovative approaches to clean cooking exist, such as the emerging field of electric cooking with solar PV. Technologies and business/financing models using this concept are still experimental, and this guide will not be addressing them directly. Further information on this emerging field can be found at: https://assets.publishing.service.gov.uk/media/57a08975ed915d3cfd00025a/Solar_Electric_Cooking_Synthesis_Report.pdf

Refilling points have been set up in low-income areas of Nairobi where the stove is being trialled, with refills costing USD 3.5 for the full kilogram, but a minimum refill value of just 60 US cents, or 50 KES. This is a significant reduction on the 13 kg canisters that were the previous minimum purchasable amount in the city, costing USD35/3000 KES alone.

4.2 PayGo Energy, Kenya

Other companies in Kenya are taking advantage of PAYG models to enable greater access to their products and services as well. In Nairobi, PayGo Energy is a distribution service for LPG fuels that is using pay-as-you-go services to bring LPG fuel access to a greater number of consumers, particularly those in informal settlements who may not traditionally have been able to afford LPG fuel services. In a similar manner to KOKO Networks, PayGo Energy allows consumers to buy small amounts of LPG fuel at a time (from as little as $0.50 for a minimum charge). Payments for fuel and equipment, as well as for scheduling deliveries, are made through the company's mobile app, which is designed to offer convenience to the consumer as well as facilitating the flexible payment structure the business model is founded on.

In addition, the system support mobile payments and ordering of fuel replacements, allowing customers to purchase as little as a day's worth of LPG (around US$0.50) at a time. This is achieved through the smart metering system on the gas bottle, which is unlocked through payments via a mobile app. This logistics system has been adapted to informal settlements, allowing uninterrupted supply to households in informal settlements via motorcycle, and is also adapted to serve bottom-of-pyramid consumers with clean thermal energy, allowing for small transactions that suit the income levels of these consumers. The system is also better in providing energy security than traditional manual pay-as-you-go methods, and requires less intervention from the consumer themselves, maximising convenience. It is hoped that these factors; the convenience of supply, the ability to purchase small amounts of gas directly, and the inherent benefits of LPG service contra charcoal or woodfuels for cooking energy needs, will be instrumental in scaling the company's services.

4.3 KopaGas, Tanzania

Other organisations are beginning to see the benefits of integrating mobile payment technology with a pay-as-you-go fuel payments model for energy services. KopaGas in Tanzania are another company using smart LPG metering to minimize the challenges posed by last-mile distribution which are typical in providing thermal energy services to communities. This organisation has only been established since 2016, but has seen high growth in services and the scale of its operations, and has attracted large amounts of seed funding from international donors for its approach. The company has also expanded its service rapidly, with around 13,000 households in Tanzania served monthly in 2016 by the organisation, and 22 direct jobs created by the company.

This smart gas meter system allows the company to deliver cylinder filling services or replacement full cylinders to communities efficiently, minimising distribution costs. In addition, the company offers a pay-as-you-go service for LPG fuel, as well as offering pay-over-time services for both fuels and cooking equipment. KopaGas has been partnering with EnviroFit, an established LPG equipment and fuel distributor in East and West Africa, in order to scale their service reach. Smart logistics technology is at the core of this organisation's approach, with smart metering systems allowing consumers to pre-purchase small amounts of LPG at a time, and also alerting the company when gas stock is running low in a consumer's cylinder, allowing the company to schedule a replacement delivery.

5.0 –Financing and Business Models for LPG Development and Opportunities for Scaling

Developing a finance and business environment for LPG services, particularly for poorer users such as those in rural areas, has proven to be a persistent issue in the developing world, particularly in Sub-Saharan Africa. There are a number of factors that contribute to this, including the high relative price of LPG compared to traditional woodfuels and charcoal, low market penetrations in developing world countries due to a lack of supply chains or consumer appliances, and significant price volatility on the global markets.

Commonly, direct subsidies are used to support the development of LPG markets and market growth. These can include directly subsidising the cost of LPG itself, or through other methods such as subsidising delivery or storage of the fuel, or directly distributing LPG bottles to consumers. Direct subsidies, however, as well-documented in the literature, can distort markets significantly. This has been seen in the Ghanaian case detailed above, for example in the collapse of supply and uptake in rural areas after the Ghanaian government's cancellation of the price-levelling subsidy in the country. Whilst directly subsidising LPG can lead to an improvement in market share and consumer access in the short-term, it has proven difficult to sustain a market presence for LPG in developing regions, even in urban areas, once supporting subsidies are removed.

Indirectly subsidising LPG has been promoted as an alternative policy-level mechanism for improving LPG access. Such indirect subsidies would include activities to create a stronger enabling environment for LPG businesses in a country, for example setting up a national regulatory body, national business accreditation, or licensing for LPG services. These activities are applicable across the LPG value chain, for example through offering accreditation to distribution companies, guaranteeing quality and regulation, or through ensuring stable and clear regulation for LPG storage.

Consumer financing options for LPG have been an area of contention in projects across the developing world, and traditionally an area of difficulty. Directly financing LPG access through providing fuels and equipment has been shown to be unsustainable in the medium/long-term: consumers revert to kerosene/charcoal for heating/lighting/cooking needs - once the subsidised LPG fuel is unavailable (case of Ghana, India).

One of the more successful consumer-side financing models used for LPG is the "cylinder exchange" model, whereby consumers purchase LPG fuel only, and then exchange the cylinders used when empty for full cylinders, without having to directly own the LPG cylinders. This alleviates the necessity of a high-upfront capital investment for LPG cylinders, at the cost of needing to install LPG refilling and storage apparatus for the energy service company. Whilst this cost can be significant, the increased consumer base which could result from using this model should offset the initial investment, allowing consumers access to LPG fuels at a lower upfront cost than before.

6.0 – Partnerships and Opportunities for LPG Business Development

One of the crucial factors affecting wider distribution of LPG in developing countries is the issue of distribution. In urban areas, distribution of LPG is generally simpler, with a higher population density able to be served by fewer installations at a lower transport and storage cost. This pattern has meant that, when supply-side factors are resolved, LPG in urban areas of developing countries can be readily available. For example, in the case of Accra, Ghana, being close to the supply-side infrastructure of the LPG fractionating and storage apparatus at the Tema refinery, meaning distribution is less cost-intensive, and access is higher. This uneven distribution of access between urban and rural areas of developing countries is one of the widespread challenges of increasing LPG access.

A number of solutions, in the form of policy mechanisms and financial subsidies, have been trialled in projects at a local and state level. One of the more successful of these is the formation of partnerships between local businesses and LPG sector actors and government agencies/third sector agencies, working together in order to achieve the objectives of a LPG program/project.

Public-private partnerships (PPP) have been used to a growing extent in energy projects in a number of renewable energy sectors in the last two decades. Projects in Sub-Saharan Africa have predominantly used a PPP model for household renewable energy systems, such as solar lighting and solar home systems, and solar water heaters. Other projects in South Asia have used such mechanisms to promote the development of biogas and bio digester markets as a fuel-switching measure from traditional wood fuels, such as the Assam state bio digester program, partnering with local installation companies to construct new digester installations.

In the LPG sector, and in development projects for LPG access in developing countries, PPPs have been predominantly used as a method of improving distribution of LPG. The Ghanaian case above used PPPs in such a manner in its most recent project work following the 2011 Sustainable Energy Action Plan. These partnerships were between the national implementing agency for the program, the Ghanaian Energy Commission, and local distribution companies for LPG bottles across the country. Contracts between the government and these distributors enabled much greater penetration of LPG across the country, particularly in rural areas which have been outside the remit of previous programs. In addition, this increased access came at a lower cost than equivalent distribution without partnerships, through utilising existing distributor/consumer networks in the country.

The potential for public-private partnerships to benefit LPG access in developing countries is wider than this, however. Utilising existing private sector actors in developing markets for energy services has been shown to be a more sustainable solution, which is less prone to distorting and collapsing markets. Many options exist in the LPG value chain as potential business sectors for new and existing energy service and retail companies/entrepreneurs in developing countries. Distribution, as already mentioned, is a major sector in the LPG value chain, however bulk storage, small-scale storage, appliance sales and maintenance, and fuel sales are all potential sectors for business growth in the LPG sector.

7.0 – Conclusions and Policy Recommendations

Improving access to LPG in developing countries can be a route to significantly improved sustainability of household energy usage, as well as improving indoor air quality and offering the potential of a large-scale energy market sector. However, there still exist numerous constraints relating to price, access and end-use of the fuel.

LPG is still an expensive energy source compared to traditional fuels, even other petroleum-based fuels such as kerosene, and attempts to alleviate this constraint through direct subsidy, as detailed in the case studies, can severely affect market development. This can be alleviated through persistent market development support, including licensing and accreditation activities, as well as notably through partnering with local organisations and companies in the energy sector to further improve LPG access. This has proven to be a viable approach in Sub-Saharan Africa, particularly in South Africa and Ghana.

Access is another issue which can be resolved through local-scale partnerships, as well as in creating an enabling environment for new LPG distribution businesses. This can be achieved both at a policy level, in ensuring more reliable national supply of LPG to ameliorate price volatility, and at a market level, in providing facilities at a government level to accredit and license LPG distribution companies, sales companies, and appliances/equipment for LPG use.

Questions & Answers

What regions are best to target for LPG interventions? What level of development has the LPG market reached in these regions?

Developing LPG markets in developing countries is a complex process, and a number of factors need to be addressed before taking decisions on where to target LPG interventions. Wealthier regions or regions near a refinery will be more suited to the particular benefits of LPG fuel use, as well as more able to address the constraints that are present in developing LPG markets.

LPG fuels are traditionally significantly more expensive than other sources of thermal energy for cooking and heating, such as charcoal or biogas. Hence, higher-income regions in developing counties, such as urban areas, are a naturally better fit for the technology (without financial interventions) than lower-income regions, such as rural areas. Cost is the most significant limiting factor when designing LPG programs, and targeting programs or businesses at areas that will require more limited cost-remediating through subsidy or loan programs will lead to more sustainable businesses.

Identifying where the local LPG production has reached a higher stage of development can also be helpful in targeting regions for LPG programs/businesses. For example, in the case of Ghana, local production capacity at the Tema oil refinery for LPG fuels has enabled the regions surrounding the refinery, including Greater Accra, to benefit from lower costs compared to other regions in the country, such as Northern, rural areas or to other countries without refinery capacity.

What financial assistance is necessary to develop an LPG program/business in a target region?

Dependent on income levels and willingness to pay for LPG services in a target region, financial assistance to kick-start markets and businesses is a key aspect of developing an LPG sector in a country. The life-cycle costs of LPG are significant, not only in terms of fuel cost itself, but also transportation, storage and the necessary equipment to utilise the fuel, such as cookstoves or water boilers. Safe storage of pressurised vessels is a heavily-regulated aspect of the use of LPG, and this also increases costs for businesses or projects when developing a market.

There are factors to consider when designing a financial assistance package for LPG services, both from a government and business-based level. At a government level, direct subsidy has traditionally been used to alleviate the cost burden of LPG services, both in the cases of Ghana and Indonesia above. However, these direct subsidies, particularly in the Ghanaian case, had the effect of distorting the private-sector market for LPG significantly, to the extent in the Ghanaian case where the market was unsupportable without the level of government subsidy previously provided.

The Indonesian case above did not per se use direct subsidies to consumers or providers, but was heavily equipment-based, providing free LPG equipment to huge numbers of rural and urban kerosene users in order to achieve the fuel-switching targeted by the government.

LPG fuel was also provided at a largely-subsidised rate but only for initial fuel purchases by consumers, and being taken up to market rate for later purchases. These factors allowed the private LPG market to develop on an even basis, with the major expense (equipment that uses LPG) having been subsidised, rather than the fuel itself as in the Ghanaian case. This allowed this market price of LPG to develop undistorted by subsidies, unlike the Ghanaian case where the market price of LPG became unaffordable for the majority of consumers once the government subsidy was removed.

What support is available through government sources to develop LPG fuel access?

There are a number of routes that governments can take to improve the enabling environment for LPG fuels in a country without directly subsidising markets. One of the most prominent of these is stable and clear regulation relating to LPG fuels. Regulations can take the form of licensing and accreditation agreements for products, companies and individuals to install and distribute LPG fuel and equipment, or in the form of capacity building and training to improve the level of market development and foster entrepreneurship. Market confidence is a more significant factor with LPG fuels than many other thermal energy technologies, given the higher level of ramifications in terms of safety incidents that can occur with LPG than other fuel sources, and having a stable and clear regulatory environment for the technology can contribute to this.

Financial support is another area in which governments can contribute to LPG market development, but this needs to be done carefully so as not to adversely distort markets. One of the more effective ways of allowing governments to support private LPG market development is through public-private partnerships, which have seen success in the Ghanaian and South African cases above.

Public-private partnerships allow both private sector organisations to access the scalability of operations that public service provision can offers, as well as allowing the public sector access to on-the-ground, localised market knowledge and expertise. These co-benefits have allowed, for example in the Ghanaian case, private sector distributors to access the capital needed to set up infrastructure for LPG transport and storage in Northern areas of the country, which have been traditionally un-serviced by government sustainability interventions, through providing the necessary start-up capital and guaranteed return on investment that public-sector bodies can offer.

References

Argus (2013) *Argus White Paper: LPG as a Cooking and Heating Fuel*. Cape Town, Argus Media. Available at: https://www.argusmedia.com/Africa/~/media/9297A960020049409381A18EE2399C8E.ashx

Clean Cooking Alliance (2017) *"Pay-as-you-go" technology to boost access to cooking fuel*. Available at: http://cleancookstoves.org/about/news/05-30-2017--pay-as-you-go-technology-to-boost-access-to-cooking-fuel.html

Competition Commission of South Africa (2017) *Dynamics of the LPG market in South Africa*. Available at: http://www.compcom.co.za/wp-content/uploads/2017/04/Chapter-4-Dynamics-of-the-LPG-market-in-South-Africa.pdf

Dafrallah, T. (2009) *Energy Security in West Africa: The Case of Senegal*. Available at: https://www.google.co.uk/url?sa=t&rct=j&q=&esrc=s&source=web&cd=1&ved=0ahUKEwjklMfiu6zNAhWPHsAKHWAbD2MQFggqMAA&url=http%3A%2F%2Fwww.gnesd.org%2F-%2Fmedia%2FSites%2FGNESD%2FPublication%2520pdfs%2FEnergy%2520Security%2520Theme%2Fenda%2520senegal_energy_security.ashx%3Fla%3Dda&usg=AFQjCNFh9E81hZtR4dWvv1igGL9VYBMpkA&sig2=BdToAjwM-lbbvT-uzSaUmg&cad=rja

Dalberg (2013) *GLPGP – Kenya Market Assessment*. Washington D.C.,Global Alliance for Clean Cookstoves . Available at: https://cleancookstoves.org/binary-data/RESOURCE/file/000/000/234-1.pdf

Dalberg (2018) *Cleaning Up Cooking In Urban Kenya With LPG And Bio-ethanol*. Available at: https://www.dalberg.com/our-ideas/cleaning-cooking-urban-kenya-lpg-and-bio-ethanol

Dontow, E./Bloomberg (2013) *Tema Oil Refinery of Ghana Sees 33% Capacity Expansion by 2015*. Available at: http://www.bloomberg.com/news/articles/2013-09-16/tema-oil-refinery-of-ghana-sees-33-capacity-expansion-by-2015

Iran Gas Institute (2007) *Capital Cost Estimate of a Typical Condensate Refinery*. Tehran, Iran Gas Institute. Available at: http://www.irangi.org/res/CapitalCost/CapitalCost.pdf

Kojima, M., World Bank (2011) *The Role of Liquefied Petroleum Gas in Reducing Energy Poverty*. Washington D.C., World Bank. Available at: http://siteresources.worldbank.org/INTOGMC/Resources/LPGReportWeb-Masami.pdf

KOKO Networks (2018) *KOKO Networks*. Available at: https://kokonetworks.com/

Kruger, Tait & de Groot (2016) *The political economy of energy transitions and thermal energy poverty: Comparing the residential LPG sectors in Indonesia and South Africa*. Available at: https://www.wider.unu.edu/publication/political-economy-energy-transitions-and-thermal-energy-poverty

Linde Engineering (2016) *Natural Gas Processing Plants*. Pullach, Linde Engineering. Available at: http://www.linde-engineering.com/internet.global.lindeengineering.global/en/images/HE_1_1_e_12_150dpi19_4271.pdf

Ministry of Petroleum and Natural Gas, India (2015) *PAHAL – Direct Benefits Transfer for LPG (DBTL) Consumers Scheme*. New Delhi, MoPNG India. Available at: http://petroleum.nic.in/dbt/

Mittal, Mukherjee & Gelb (2017) *Fuel Subsidy Reform in Developing Countries: Direct Benefit Transfer of LPG Cooking Gas Subsidy in India*. Available at: https://www.cgdev.org/sites/default/files/fuel-subsidy-reform-developing-countries-india.pdf

Smith, Rogers & Cowin (2005) *Household Fuels and Ill-Health in Developing Countries: What improvements can be brought by LP Gas?* Available at: http://www.kirkrsmith.org/publications/2005/08/23/household-fuels-and-ill-health-in-developing-countries-what-improvements-can-be-brought-by-lp-gas

Tripathi, A., Sagar, A. & Smith, K. (2015) *Promoting Clean and Affordable Cooking: Smarter Subsidies for LPG*. Available at: http://ehsdiv.sph.berkeley.edu/krsmith/publications/2015/LPG_Working_Paper_July_2015.pdf

WLPGA (2014) *Guide to Good Industry Practices for LPG Associations*. Neuilly-sur-Seine, World LPG Association. Available at: http://www.wlpga.org/wp-content/uploads/2015/10/Guide-to-Good-Industry-Practices-for-LPG-in-Commercial-Kitchens.pdf

WLPGA (2014) *Guidelines for the Development of Sustainable LPG Markets: Transitioning-Stage Markets*. Neuilly-sur-Seine, World LPG Association. Available at: http://www.wlpga.org/wp-content/uploads/2015/09/guidelines-for-the-development-of-sustainable-lpg-markets.pdf

WLPGA (n.d.) *The GenteGas Project in Guatemala – A WLPGA Case Study*. Neuilly-sur-Seine, World LPG Association. Available at: http://www.wlpga.org/wp-content/uploads/2015/10/Safety-Consumer-Education-%E2%80%93-The-GenteGas-Pilot-July-2015.pdf

WLPGA/GACC (2013) *Cooking with gas: Why women in developing countries want LPG and how they can get it*. Neuilly-sur-Seine, World LPG Association. Available at: http://www.energia.org/cms/wp-content/uploads/2015/04/01.-WLPGA_-_Cooking_with_LP_Gas_Report_-_FINAL__PbP.pdf

World Bank (2011) *Household Cookstoves, Environment, Health and Climate Change*. *A New Look at an Old Problem*. Available at: http://documents.worldbank.org/curated/en/732691468177236006/Household-cookstoves-environment-health-and-climate-change-a-new-look-at-an-old-problem

Academic Papers

Asante, K.P. et al. (2018) Ghana's rural liquefied petroleum gas program scale up: A case study. *Energy for Sustainable Development*, Vol. 46, pp. 94 – 102

Baiyegunhi, L.J.S & Hassan, M.B. (2014) Rural household fuel energy transition: Evidence from Giwa LGA Kaduna State, Nigeria. *Energy for Sustainable Development*, Vol. 20, pp. 30-35.

Banks, D. (2003) Rural energy service delivery: a public private partnership approach. Available at: http://citeseerx.ist.psu.edu/viewdoc/download?doi=10.1.1.471.838&rep=rep1&type=pdf

Bazilian, M. et al. (2011) Partnerships for access to modern cooking fuels and technologies. Current *Opinion in Environmental Sustainability*, Vol. 3, pp. 254 – 259.

D'Sa, A. & Narasimha Murthy, K.V. (2004) LPG as a cooking fuel option for India. *Energy for Sustainable Development*, Vol. 8, Iss. 3, pp. 91 – 106.

Del Granado, F.J.A., Coady, D. & Gillingham, R. (2012) The unequal benefits of fuel subsidies: A review of evidence for developing countries. *World Development*, Vol. 40, No. 11, pp. 2234 – 2248.

Global Alliance for Clean Cookstoves (2003) Kerosene and LPG Markets in India. Washington D.C., Global Alliance for Clean Cookstoves. Available at: http://cleancookstoves.org/resources_files/kerosene-lpg-in-india.pdf

Mensah, J.T. & Adu, G. (2015) An empirical analysis of household energy choice in Ghana. *Renewable and Sustainable Energy Reviews*, Vol. 51, pp. 1402 – 1411.

Pandey, V.L. & Chaubal, A. (2011) Comprehending household cooking energy choice in rural India. *Biomass & Bioenergy*, Vol. 35, pp. 4724 – 4731.

Thoday, K. et al. (2018) Mega Conversion Program from kerosene to LPG in Indonesia: Lessons learned and recommendations for future clean cooking energy expansion. *Energy for Sustainable Development*, Vol. 46, pp. 71 – 81.

Treiber, M.U., Grimsby, L.K. & Aune, J.B. (2015) Reducing energy poverty through increasing choice of fuel and stoves in Kenya: Complementing the multiple fuel model. *Energy for Sustainable Development*, Vol. 27, pp. 54 – 62.

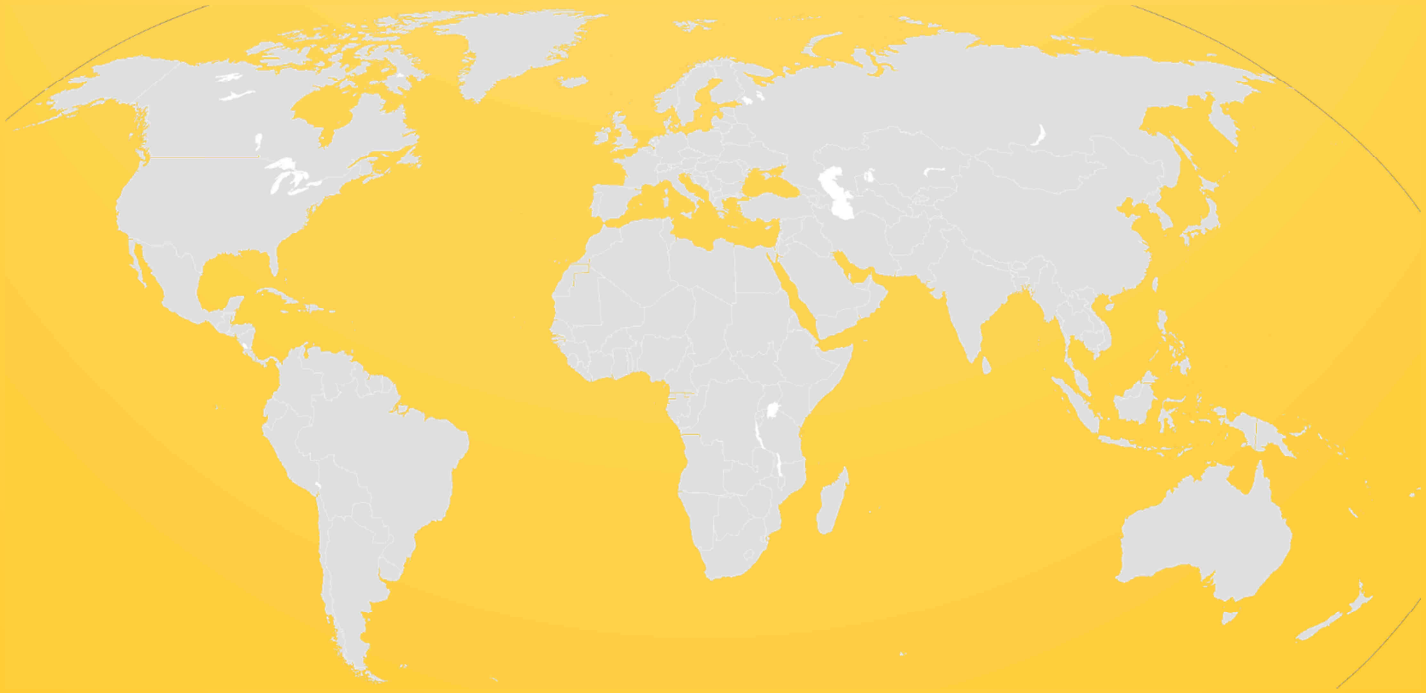

This document is an output from a project co-funded by UK aid from the UK Department for International Development (DFID), the Engineering & Physical Science Research Council (EPSRC) and the Department for Energy & Climate Change (DECC), for the benefit of developing countries. The views expressed are not necessarily those o DFID, EPSRC or DECC.